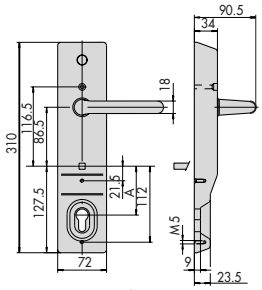

	A
1.07074.50	72
1.07074.52	72
1.07074.60	92
1.07074.62	92

1

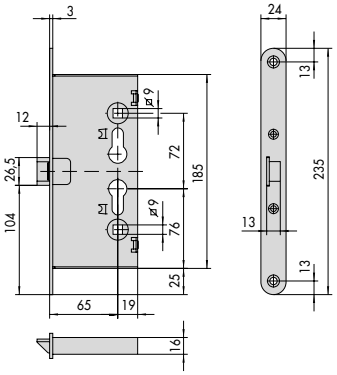

1.43000.65, 1.43110.65, 1.43114.65

2

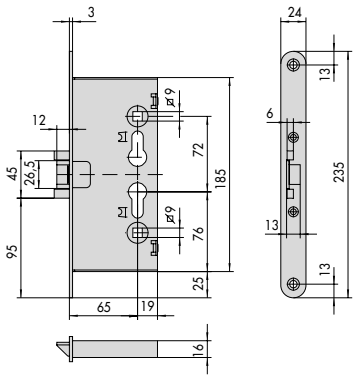

1.43020.65,1.43024.65, 1.43120.65, 1.43130.65,

3

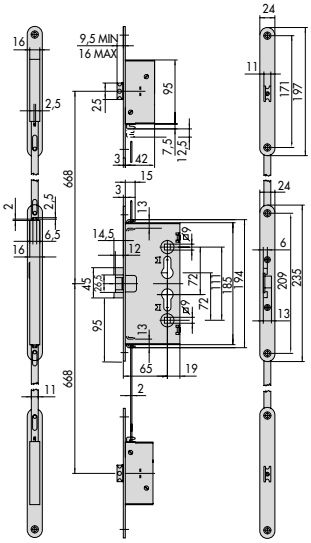

1.43025.65

4

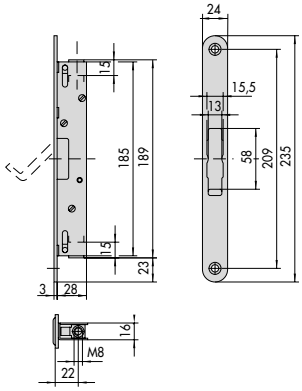

1.43090.00

5

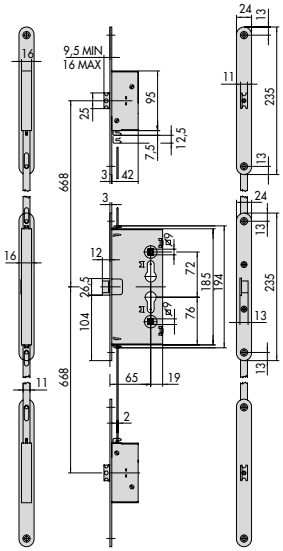

1.43115.65

6

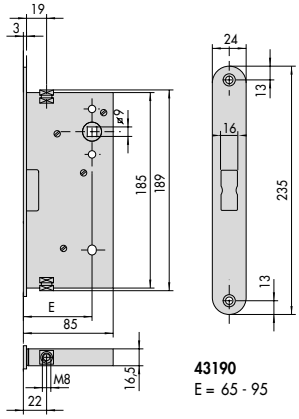

43190
E = 65 - 95

7

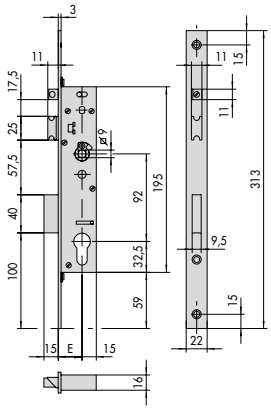

43520, 43530, 43620, 43630, 43631, 43632

E = 25 - 30 - 35 - 40 - 45

8

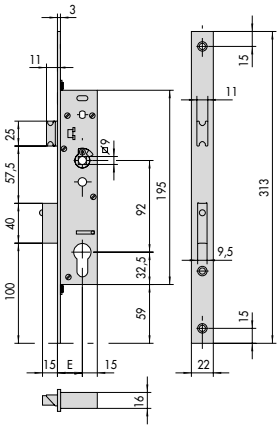

43650, 43660, 43661, 43662

E = 25 - 30 - 35 - 40 - 45

9

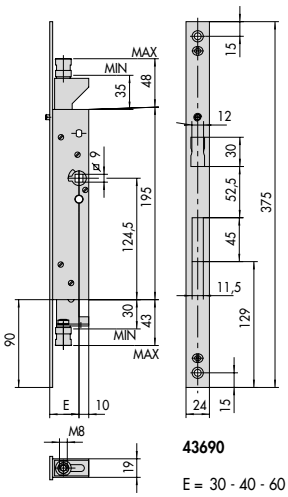

43690

E = 30 - 40 - 60 - 75

10

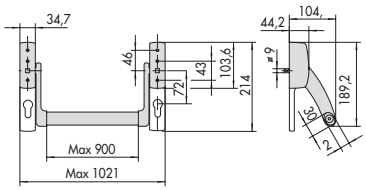

1.59605.00, 1.59615.00

11

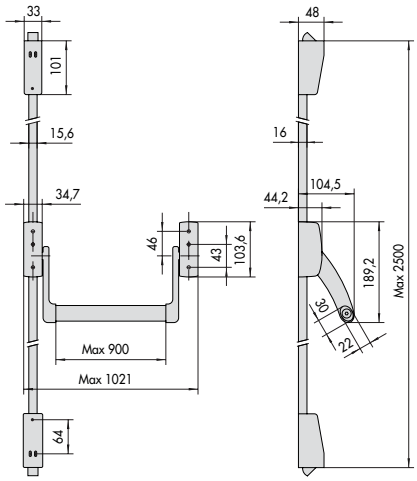

1.59646.00

12

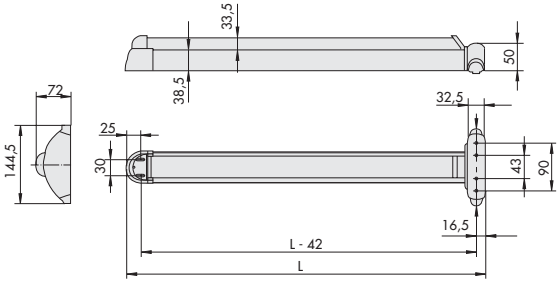

59710
L = 1200 - 840

13